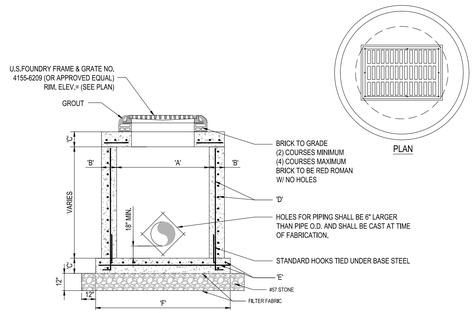

TYPE	"A"	"B"	"C"	"D"	"E"	"F"
C-4	4'-0" Ø	8"	8"	# 4 @ 12" C.C.E.W.	# 4 @ 12" C.C.E.W.	6'-4" Ø
C-5	5'-0" Ø	8"	8"	# 5 @ 12" C.C.E.W.	# 5 @ 12" C.C.E.W.	7'-4" Ø
C-6	6'-0" Ø	8"	8"	# 5 @ 12" C.C.E.W.	# 5 @ 6" C.C.E.W.	8'-4" Ø
C-7	7'-0" Ø	8"	8"	# 5 @ 12" C.C.E.W.	# 5 @ 6" C.C.E.W.	9'-4" Ø
C-8	8'-0" Ø	10"	10"	2- W.W.M. w/ # 4 @ 12" C.C. VERT	# 5 @ 6" C.C.E.W.	10'-8" Ø

1 PRECAST CIRCULAR CATCH BASIN

SCALE: NONE

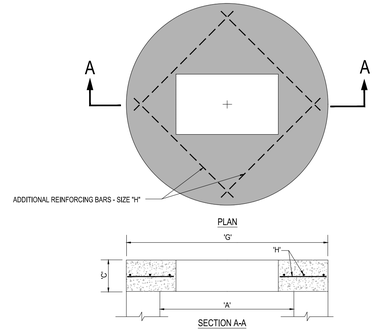

TYPE	"A"	"C"	"G"	"H"
C-4	4'-0" Ø	8"	5'-4" Ø	# 4 @ 6" C.C.E.W.
C-5	5'-0" Ø	8"	6'-4" Ø	# 5 @ 8" C.C.E.W.
C-6	6'-0" Ø	8"	7'-4" Ø	# 5 @ 6" C.C.E.W.
C-7	7'-0" Ø	8"	8'-4" Ø	# 5 @ 6" C.C.E.W.
C-8	8'-0" Ø	10"	9'-8" Ø	# 5 @ 6" C.C.E.W.

2 PRECAST CONCRETE-TOP SLAB

SCALE: NONE

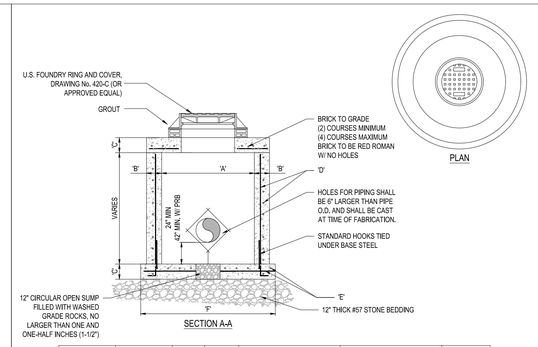

TYPE	"A"	"B"	"C"	"D"	"E"	"F"
M-4	4'-0" Ø	8"	8"	# 4 @ 12" C.C.E.W.	# 4 @ 12" C.C.E.W.	6'-4" Ø
M-5	5'-0" Ø	8"	8"	# 5 @ 12" C.C.E.W.	# 5 @ 12" C.C.E.W.	7'-4" Ø
M-6	6'-0" Ø	8"	8"	# 5 @ 12" C.C.E.W.	# 5 @ 6" C.C.E.W.	8'-4" Ø
M-7	7'-0" Ø	8"	8"	# 5 @ 12" C.C.E.W.	# 5 @ 6" C.C.E.W.	9'-4" Ø
M-8	8'-0" Ø	10"	10"	2- W.W.M. w/ 4 @ 12" C.C. VERT	# 5 @ 6" C.C.E.W.	10'-8" Ø

3 PRECAST CIRCULAR DRAINAGE MANHOLE

SCALE: NONE

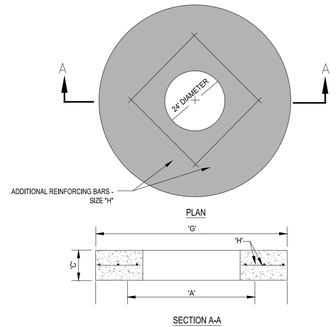

TYPE	"A"	"C"	"G"	"H"
M-4	4'-0" Ø	8"	5'-4" Ø	# 4 @ 6" C.C.E.W.
M-5	5'-0" Ø	8"	6'-4" Ø	# 5 @ 8" C.C.E.W.
M-6	6'-0" Ø	8"	7'-4" Ø	# 5 @ 6" C.C.E.W.
M-7	7'-0" Ø	8"	8'-4" Ø	# 5 @ 6" C.C.E.W.
M-8	8'-0" Ø	10"	9'-8" Ø	# 5 @ 6" C.C.E.W.

4 PRECAST CONCRETE-TOP SLAB FOR DRAINAGE MANHOLES

SCALE: NONE

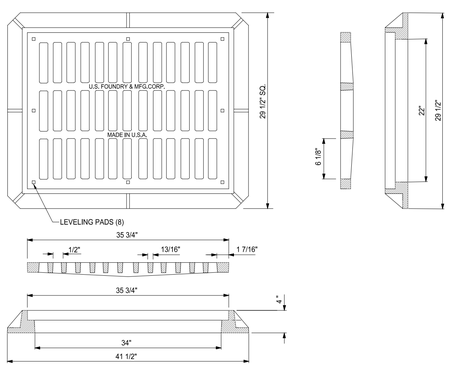

NOTE:
1. GRATE TO BE TYPE U.S.F. No. 4139-6002
2. TO BE USED IN PARKING & PEDESTRIAN AREAS

5 FRAME AND GRATE DETAIL

SCALE: NONE

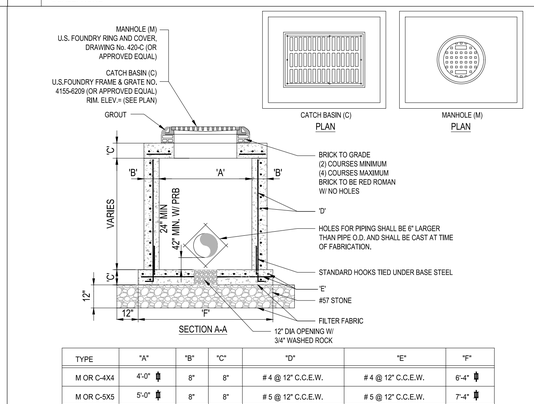

TYPE	"A"	"B"	"C"	"D"	"E"	"F"
M OR C-4X4	4'-0" #	8"	8"	# 4 @ 12" C.C.E.W.	# 4 @ 12" C.C.E.W.	6'-4" #
M OR C-5X5	5'-0" #	8"	8"	# 5 @ 12" C.C.E.W.	# 5 @ 12" C.C.E.W.	7'-4" #
M OR C-6X6	6'-0" #	8"	10"	# 6 @ 12" C.C.E.W.	# 5 @ 6" C.C.E.W.	8'-4" #
M OR C-7X7	7'-0" #	8"	10"	# 6 @ 12" C.C.E.W.	# 5 @ 6" C.C.E.W.	9'-4" #
M OR C-8X8	8'-0" #	10"	10"	# 5 @ 12" C.C.H.E.W. # 5 @ 6" C.C.V.E.W.	# 5 @ 6" C.C.E.W.	10'-8" #

6 PRECAST SQUARE DRAINAGE STRUCTURE

SCALE: NONE

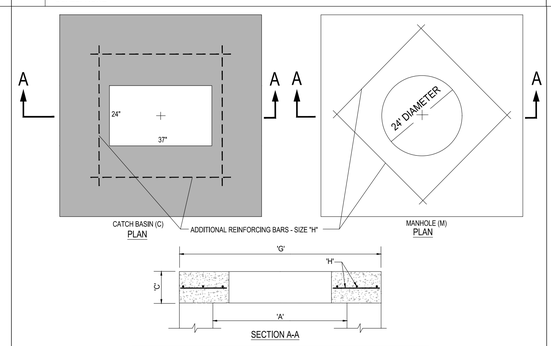

TYPE	"A"	"C"	"G"	"H"
M OR C-4X4	4'-0" #	8"	5'-4" #	# 4 @ 6" C.C.E.W.
M OR C-5X5	5'-0" #	8"	6'-4" #	# 5 @ 8" C.C.E.W.
M OR C-6X6	6'-0" #	10"	7'-4" #	# 5 @ 6" C.C.E.W.
M OR C-7X7	7'-0" #	10"	8'-4" #	# 5 @ 6" C.C.E.W.
M OR C-8X8	8'-0" #	10"	9'-8" #	# 5 @ 6" C.C.E.W.

7 PRECAST SQUARE TOP SLAB

SCALE: NONE

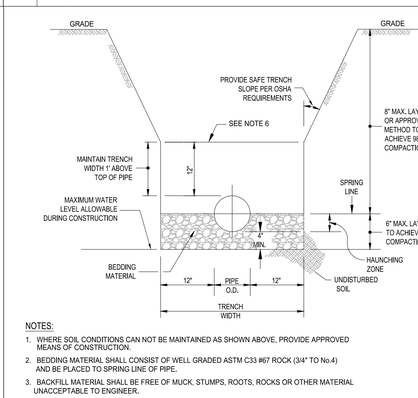

NOTES:
1. WHERE SOIL CONDITIONS CAN NOT BE MAINTAINED AS SHOWN ABOVE, PROVIDE APPROVED MEANS OF CONSTRUCTION.
2. BEDDING MATERIAL SHALL CONSIST OF WELL GRADED ASTM C33 #67 ROCK (3/4" TO No.4) AND BE PLACED TO SPRING LINE OF PIPE.
3. BACKFILL MATERIAL SHALL BE FREE OF MUCK, STUMPS, ROOTS, ROCKS OR OTHER MATERIAL UNACCEPTABLE TO ENGINEER.
4. SHEETING WILL BE REQUIRED AS DETERMINED IN THE FIELD.
5. REFER TO SPECIFICATIONS FOR EXCAVATION IN MUCK OR OTHER UNSUITABLE MATERIAL.
6. COMPACTION PERCENTAGES SHOWN REFER TO AASHTO T-180.
7. MECHANICAL COMPACTION NOT ALLOWED BELOW THIS LEVEL (WITHIN 12" OF TOP OF PIPE).
8. THOROUGHLY WORK IN AND TAMP THE BEDDING MATERIAL IN THE HAUNCHING ZONE BEFORE PLACING AND COMPACTING REMAINDER OF BACKFILL.

8 TRENCH DETAIL

SCALE: NONE

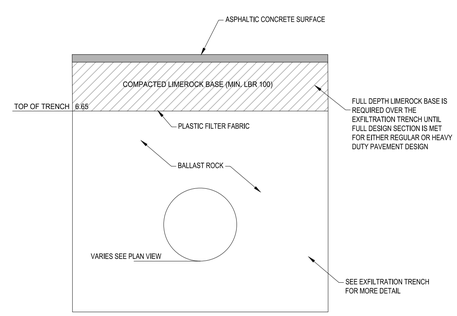

9 TRENCH PAVEMENT SECTION OVER EXFIL. TRENCH

SCALE: NONE

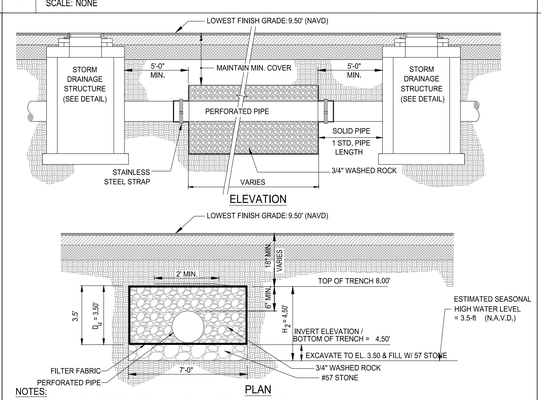

NOTES:
1. PIPES SHALL CONNECT TO ADDITIONAL CATCH BASINS AS REQUIRED.
2. BALLAST ROCK SHALL CONSIST OF 3/4" WASHED ROCK AND BE FROM FRESH WATER WASHED FREE OF DELETERIOUS MATTER.
3. TRENCH TO BE LINED WITH AMOCO PROPEX 4545 OR APPROVED EQUIVALENT TYPE FILTER FABRIC. OVERLAP TRENCH LINING MATERIAL A MINIMUM OF 2' AT TOP OF TRENCH. CLOSE ENDS AND STRAP AROUND PIPE.
4. IN AREAS OVER TRENCH WHERE THE FULL ROADWAY SECTION CANNOT BE CONSTRUCTED, THE AREA ABOVE THE TRENCH SHALL CONSIST ENTIRELY OF LIMEROCK BASE (LBR100).

10 EXFILTRATION TRENCH

SCALE: NONE

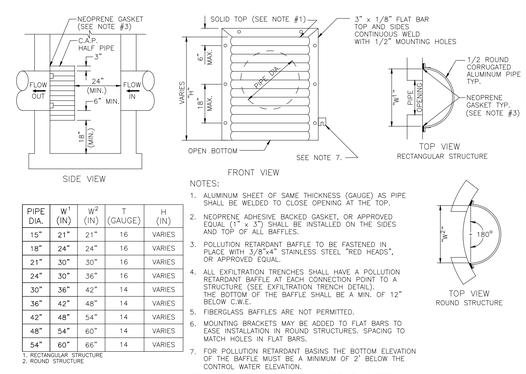

PIPE DIA.	W^1 (IN)	W^2 (IN)	T (GAUGE)	H (IN)
15"	21"	21"	16	VARIES
18"	24"	24"	16	VARIES
21"	30"	30"	16	VARIES
24"	30"	36"	16	VARIES
30"	36"	42"	14	VARIES
36"	42"	48"	14	VARIES
42"	48"	54"	14	VARIES
48"	54"	60"	14	VARIES
54"	60"	66"	14	VARIES

1. RECTANGULAR STRUCTURE
2. ROUND STRUCTURE

NOTES:
1. ALUMINUM SHEET OF SAME THICKNESS (GAUGE) AS PIPE SHALL BE WELDED TO CLOSE OPENING AT THE TOP.
2. NEOPRENE ADHESIVE BACKED GASKET, OR APPROVED EQUAL (1" x 3") SHALL BE INSTALLED ON THE SIDES AND TOP OF ALL BAFFLES.
3. POLLUTION RETARDANT BAFFLE TO BE FASTENED IN PLACE WITH 3/8"x4" STAINLESS STEEL "RED HEADS", OR APPROVED EQUAL.
4. ALL EXFILTRATION TRENCHES SHALL HAVE A POLLUTION RETARDANT BAFFLE AT EACH CONNECTION POINT TO A STRUCTURE (SEE EXFILTRATION TRENCH DETAIL). THE BOTTOM OF THE BAFFLE SHALL BE A MIN. OF 12" BELOW C.W.E.
5. FIBERGLASS BAFFLES ARE NOT PERMITTED.
6. MOUNTING BRACKETS MAY BE ADDED TO FLAT BARS TO EASE INSTALLATION IN ROUND STRUCTURES. SPACING TO MATCH HOLES IN FLAT BARS.
7. FOR POLLUTION RETARDANT BASINS THE BOTTOM ELEVATION OF THE BAFFLE MUST BE A MINIMUM OF 2' BELOW THE CONTROL WATER ELEVATION.

POLLUTION RETARDANT BAFFLE DETAIL

11\ POLLUTION RETARDENT BAFFLE DETAIL

SCALE: NONE

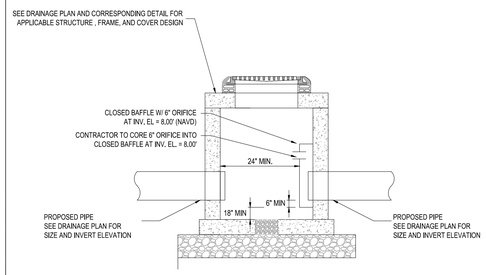

CLOSED BAFFLE CONTROL STRUCTURES

12 CLOSED BAFFLE CONTROL STRUCTURE

SCALE: NONE

COSTCO WHOLESALE
POMPANO BEACH

COSTCO WHOLESALE CORPORATION
999 LAKE DRIVE
ISSAQUAH, WA 98027
T: 425.313.8100
www.costco.com

THOMAS ENGINEERING GROUP
6300 NW 31st AVENUE
FORT LAUDERDALE, FL 33309
PH: (954) 202-7000
www.ThomasEngineeringGroup.com

40 20 10 0 40
1"= 40'

Matthew J. Cigale
Digitally signed by Matthew J. Cigale
DN: c=US, o=Unaffiliated, dnQualifier=A01410C00000192 2C7B6CB00090EEC, cn=Matthew J. Cigale
Date: 2025.10.29 15:27:08 -04'00'
October 29, 2025
FLORIDA BUSINESS CERT. OF AUTH. No. 27528

△	DATE	DESCRIPTION

F240051
OCT. 29, 2025

PAVING, GRADING & DRAINAGE DETAILS

C-09.1

DRC
PZ25-12000023
12/09/2025

COSTCO - POMPANO BEACH

POMPANO BEACH, FLORIDA

PAVING, GRADING & DRAINAGE DETAILS

OCT. 29, 2025